Maxx
WFL 2061

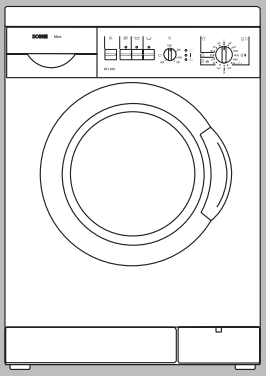

en Instruction Manual and Installation Instructions

Internet:
http://www.
bosch-hausgeraete.de

BOSCH

Table of Contents

Operating Instructions

Disposal Information 4

Environmental Protection / Conservation Issues 5

General Safety Instructions 6

Your New Washing Machine 7

Before Using Your Washing Machine For the First Time 9

Preparing, Sorting and Loading the Laundry 10

Laundry Detergents and Additives 15

Selecting Programmes 17

Washing 21

When the Programme has Ended 23

Special Applications 24

Cleaning and Care 26

Troubleshooting Minor Faults 31

Customer Service 34

Consumption Rates 35

Installation Instructions

Installation, Connection and Transport 36

Please read this instruction manual and all other information accompanying the washing machine before operating the appliance.

Please retain all documents for future reference or for a subsequent appliance owner.

Disposal Information

Disposing of the packaging

The shipping package has protected your new appliance on its way to your home. All packaging materials are environment-friendly and recyclable. Please contribute to a better environment by disposing of packaging materials in an environmentally conscious manner.

Please ask your dealer or local authority about best means of disposal.

⚠ Danger of suffocation!
Keep children away from shipping carton and packaging components. Danger of suffocation from plastic film and folding cartons.

Disposing of your old appliance

Old appliances are not worthless rubbish! Environment-conscious recycling can reclaim valuable raw materials.

⚠ Danger of fatal injury!
On out-of service appliances, unplug mains plug. Cut off power cord and discard with mains plug.

To prevent playing children from becoming trapped and endangered, ensure that the door locking mechanism is disabled.

Environmental Protection / Conservation Issues

Through the economical use of energy, water and detergents, your appliance is kind to the environment as well as your household budget. The consumption rates of this appliance can be found on Page 35.

Please observe the following in order to wash your laundry in an economical and environmentally friendly manner:

– Do not exceed the maximum load specifications:

Cottons + Linens	5.0 kg / 11 lb
Easy-care	3.0 kg / 6.6 lb
Delicates and Woollens	2.0 kg / 4.4 lb

For small amounts of laundry, the automatic water level control system reduces the consumption of both water and energy.

– Where possible, use the 60 °C "Intensive Stains" programme instead of the 90 °C "Cottons + Linens" programme. The extended washing duration means that a cleaning result comparable to that of the 90 °C programme is achieved using considerably less energy.

– Avoid using the Prewash programme when washing lightly to normally soiled laundry.

– Add detergent according to the degree of soiling, amount of laundry and water hardness, and observe the detergent manufacturer's instructions.

General Safety Instructions

Your washing machine is intended:

- For domestic use only.
- For washing machine-washable fabrics in washing solution.
- For operation using cold tap water and conventional laundry detergents and additives that are suitable for use in washing machines.

Do not leave children unsupervised near the washing machine.

Keep pets away from the washing machine.

Do not insert/pull out the mains plug with wet hands.

Do not pull out the mains plug by tugging the cable.

Do not touch the loading door if washing at high temperatures.

Caution when draining hot water.

Do not climb onto the washing machine and do not lean on the open loading door.

Your New Washing Machine

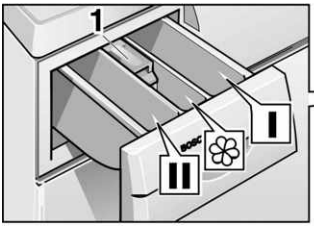

Filling laundry detergent and/or additive dispensers

Dispenser **I**:
Detergent for prewash or starch.

Dispenser **II**:
Detergent for main wash, soaking agent, softener, bleach or stain remover.

❀ Dispenser:
Additives, e.g. fabric softener or former (fill at least to lower edge of insert **1**).

Open the loading door ...

and close it.

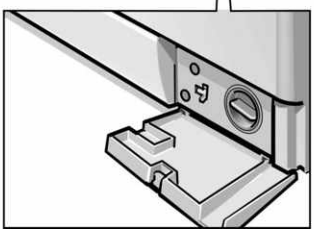

Drain washing solution if necessary

Control panel

2. Control lights illuminate

" ○ " when programme is finished.

" | " when "⏻" is pressed.

" ⏻ " when programme is selected.

Flashing control lights = operating fault.

1. Select a programme

Can be turned in both directions.
Switches on / off the washing machine.
The programme selector does not rotate while the programme is running - the programme sequence is electronically controlled.

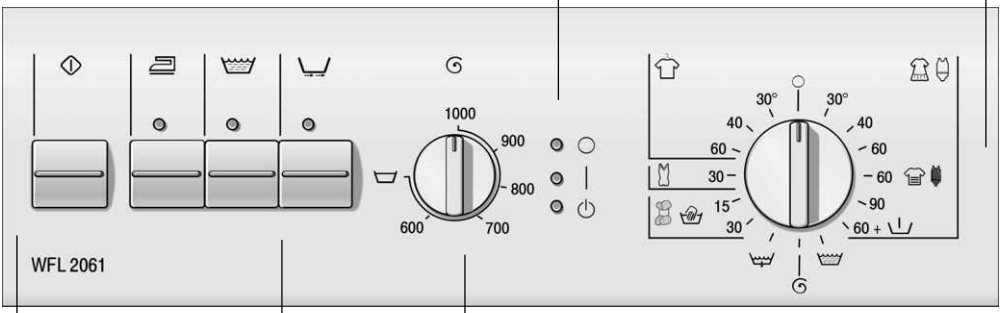

3. Set the spin speed (if desired)

Variable; must click into place at "🧺".

4. Press buttons for additional functions

(where required to supplement the programme)

"🧺": Reduces creasing.

"🧺": Additional rinsing cycle.

"🧺": Shortened programme duration.

It is also possible to combine the additional functions at any time.

The control light above the option button lights up when the respective additional function is active.

To cancel the additional function: Press the button again.

5. Press the "⏻" button

The washing process begins (programme must have been selected).

Before Using Your Washing Machine For the First Time

The washing machine must have been installed and connected properly (refer to Page 36).

Your appliance was tested before leaving the factory. To remove any water left over from testing procedures, the first washing cycle should be carried out without laundry in the machine.

- ❑ Do not load any laundry.
- ❑ Turn on the water tap.
- ❑ Pull out the detergent dispenser up to the end stop.
- ❑ Pour approx. 1 litre / 1 ¾ pt of water into chamber **II** of the detergent dispenser.
- ❑ Half fill the measuring beaker with detergent and pour into chamber **II**. Do not use any special detergents for delicates or woollens (excessive foam).
- ❑ Close the detergent dispenser.
- ❑ Set the programme selector to "90 °C Cottons + Linens".
  The " " control light comes on.
- ❑ Press the " " button.
  The " " control light comes on.

When the " " control light comes on:

- ❑ Set the programme selector to " ".

Preparing, Sorting and Loading the Laundry

Preparing the laundry

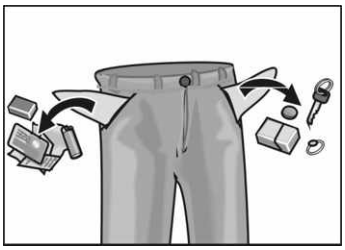

Caution
Loose debris (e.g. coins, paper clips, needles, nails) can damage items of clothing as well as parts of the washing machine (e.g. drum).

- ❑ Empty all pockets on items of clothing.
- ❑ Brush out any sand from pockets and cuffs.
- ❑ Close zip-fasteners and button up bed covers.
- ❑ Remove curtain runners or tie them up in a net / bag.
- ❑ The following items must be washed inside a net / pillow case:
  - – Extremely delicate items, e.g. fine tights, net curtains.
  - – Small items, e.g. small socks or handkerchiefs.
  - – Underwired bras (the wire may come loose during washing and cause damage).
- ❑ When washing trousers, knitwear and woven fabrics, e.g. shirts, T-shirts or sweatshirts, always turn these items inside out.

Sorting the laundry

Caution
Items of clothing can become discoloured. Never wash new multi-coloured items together with other items.

According to colour and degree of dirt

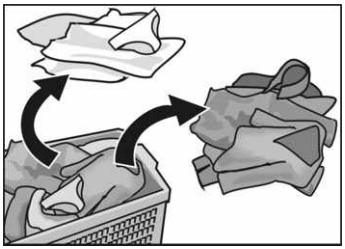

White items may become grey. Always wash white and coloured items separately.

Degrees of dirt

Slight dirt
No recognizable dirt or staining. Laundry may have some body odour.

- Light summer clothing and sportswear that has only been worn for a few hours.
- T-shirts, shirts and blouses that have been worn for up to one day.
- Bed linen and guest towels that have been used for one day.

Normal dirt
Visible dirt and/or some light staining recognizable.

- T-shirts, shirts and blouses that are very sweaty or have been worn several times.
- Underwear that has been worn for one day.
- Tea towels, hand towels and bed linen that have been used for up to one week.
- Net curtains (without nicotine staining) that have not been washed for up to ½ year.

Intensive dirt
Dirt and/or staining recognizable.

- Kitchen hand towels that have been used for up to one week.
- Fabric napkins.
- Bibs.
- Children's outer clothing or football shirts and shorts with grass and soil stains.
- Working clothes such as overalls or baker's and butcher's coats.

Typical stains

- Skin fat, cooking oils / fat, sauces, mineral oil, wax (containing fat / oil).
- Tea, coffee, red wine, fruit, vegetables (bleachable).
- Blood, egg, milk, starch (egg white containing carbohydrate).
- Soot, soil, sand (pigments), red sand on tennis clothes.

Removing stains

Wherever possible, remove / pretreat stains whilst they are still fresh.

First, dab soapy water onto the stain. Do not rub.

Subsequently wash the items of clothing using the appropriate programme.

Several washing cycles may sometimes be required in order to remove stubborn / dried in stains.

Sorting laundry according to their care label specifications

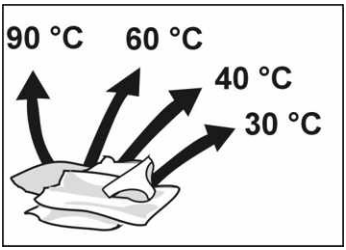

Only wash laundry that is labelled with the following care symbols:

90 °C Cottons + Linens

60 °C, 40 °C, 30 °C Cottons + Linens

60 °C, 40 °C, 30 °C Easy-care

40 °C, 30 °C Delicates

40 °C, 30 °C Woollens
(hand and machine-washable)

Laundry that is labelled with the following care symbol must not be washed in the washing machine:

= do not wash

Loading the laundry

⚠ Risk of explosion!
Items of clothing that have been pretreated with solvent-based cleaning agents, e.g. stain remover and dry cleaning spirit, represent an explosion hazard once loaded into the washing machine. Therefore, these items must first be rinsed thoroughly by hand.

Caution
Loose debris in the washing machine drum can damage the laundry. Before loading the laundry, check that there is no debris in the drum.

❑ Open the loading door.

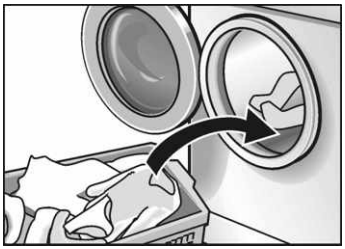

❑ Unfold the sorted items of clothing and place them loosely into the drum. Mix up large and small items.
Items of varying size will distribute better during the spin cycle.

❑ Do not exceed the maximum load: Overloading will cause poor wash results and encourage creasing.

When washing a small amount of laundry, the washing machine automatically reduces the amount of water and energy used.

❑ Close the loading door.
Take care not to trap any items of clothing between the loading door and rubber seal.

Laundry Detergents and Additives

Dispensing the correct amount of detergent

⚠ Risk of poisoning!
Keep detergents and additives out of the reach of children.

Dispense the detergent according to:

- ❑ the water hardness. This information can be obtained from your local water authority.
- ❑ the amount of laundry.
- ❑ the amount of soil. Information on soiling can be found on Page 11.
- ❑ the specifications of the detergent manufacturer. Dispensing the correct amount of detergent relieves the strain on the environment and ensures optimum washing results.

Pour liquid detergent into the appropriate dispensing chamber.

Too little detergent:
The laundry is not cleaned properly and will, after a while, become grey and stiff.
Greyish brown spots (fat globules) may appear on the laundry. The heaters may calcify.

Too much detergent:
Environmentally incompatible, excessive foam reduces wash agitation causing poor washing and rinsing results.

Filling laundry detergent and/or additive dispensers

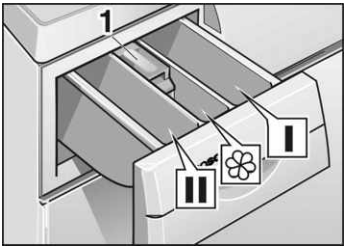

Dispenser **I**:
Detergent for prewash or starch.

Dispenser **II**:
Detergent for main wash, soaking agent, softener, bleach or stain remover.

❀ Dispenser:
Cleaning product, e.g. fabric softener, fabric conditioner.

– Fill at least to lower edge of insert **1**.

– If the liquid additive is thick, mix with a little water before dispensing (prevents clogging of the overflow).

❑ Pull out the detergent dispenser up to the end stop.

❑ Add the detergent and/or additive.

❑ Close the detergent dispenser.

Selecting Programmes

Basic programmes

Select the desired programme (refer also to separate “Programme Chart”).

90 °C Cottons + Linens
An energy-intensive programme for heat-resistant textiles, e.g. cotton or linen.

To protect the drainage pipes, the hot water is mixed with approx. 7 litres / 1 $^{1}/_{2}$ gal. of cold water before being drained.

60 °C Intensive Stains
For stained, heavily soiled textiles, e.g. cotton or linen. Energy-saving programme. The extended washing time achieves a cleaning result comparable to that of the 90 °C programme, but uses considerably less energy.

60 °C Cottons + Linens with Prewash
For heavily soiled, hard-wearing textiles, e.g. cotton or linen.

30, 40, 60 °C Cottons + Linens
For hard-wearing textiles, e.g. cotton or linen.

30, 40, 60 °C Easy-care
For easy-care textiles, e.g. cotton, linen, synthetic materials or blended fabrics.

30 °C Delicates
For delicate, washable textiles, e.g. silk, satin, synthetic materials or blended fabrics (e.g. curtains).

Delicates cycle at 30 °C for hand and machine washable silk.
We do not recommend washing these textiles with other rougher textiles.
To treat very delicate silk textiles even more gently, reduce the time by pressing the "" button.
No spinning between rinse cycles.
Maximum spin speed: 600 r.p.m.

30 °C, Woollens cold
For hand and machine washable wool or wool-rich textiles, e.g. cashmere, mohair or angora.

Extra cycle programme selector

Rinse cycle with subsequent spin cycle for rinsing hand-washed laundry or for starching.
Maximum spin speed: 800 r.p.m.

Spin cycle for spinning hand-washed laundry. Water is drained before the spin cycle.
Maximum spin speed: 800 r.p.m.

Draining of the rinsing water after a wash programme with the "" setting for the gentle treatment of delicate laundry.

Spin speed selector

Basic setting
= Spin speed selector pointing upward
In the "Cottons + Linens" programme the fabrics will be spun at the maximum possible spin speed.

In the "Easy-care", "Delicates" and "Woollens" programmes, a lower spin speed will automatically be used, regardless of the position of the spin speed selector – for the gently washing of the laundry.

Maximum spin speeds

Revolutions per minute	Type of laundry / Extra cycle
1000	Cottons + Linens
800	Easy-care
600	Delicates
800	Woollens
800	Rinse
800	Spin

Additional function on spin speed selector

For delicate laundry and net curtains. The laundry remains lying in the water after the final rinse.
Before the laundry can be unloaded, the "" or "" programme must be performed.

Additional options buttons

Special spin sequence with subsequent loosening of the washing.
After the spin cycle the washing is arranged loosely in the drum – creasing is reduced.

The maximum speed is automatically reduced to 800 r.p.m. for the "Cottons + Linens" programmes.

Observe maximum load for each type of textile; remove the washing as soon as the spin cycle is complete.

An additional rinsing cycle is performed; The washing duration will be prolonged accordingly.

Recommended application:
In areas with very soft water.

Reduced washing duration – only 2 rinsing cycles.
Suitable for slightly dirty laundry.

Recommended load amount:
Up to a maximum of 3 kg.

Washing

❑ Turn on the water tap.

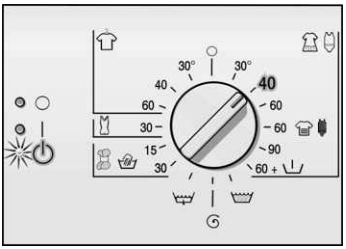

❑ Turn the programme selector to the desired programme (refer also to separate “Programme Chart”).
The “⏻” control light comes on.

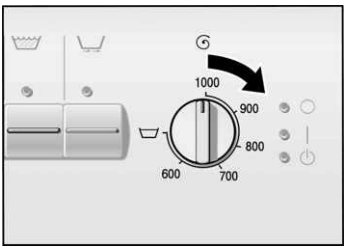

❑ Select the desired spin speed or “⏛”.

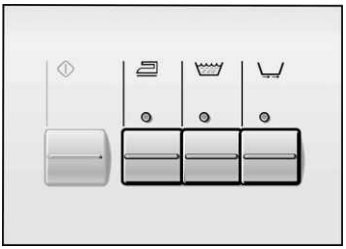

❑ Where required, press the option button(s) for additional function(s).

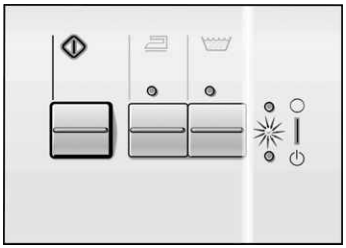

❑ Press the "⏀" button.
The " | " control light comes on, and the programme starts.

The " | " control light remains lit for the entire duration of the programme.

Changing a programme

If you have accidentally selected the wrong programme:

❑ Turn the programme selector to " ○ ".

❑ Turn the programme selector to the desired programme.
The " ⏻ " control light comes on.

❑ Press the "⏀" button.
The " | " control light comes on, and the new programme starts.

Cancelling active programme

If you wish to prematurely end a programme:

❑ Turn the programme selector to " ○ ".

❑ Turn the programme selector to "🚿" or "🌀".
The " ⏻ " control light comes on.

For "🌀", select the desired spin speed (but not "🛁").

❑ Press the "⏀" button.
The " | " control light comes on.

When the Programme has Ended

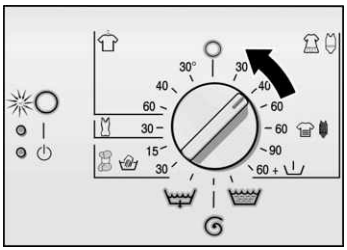

The " ○ " control light comes on.

❑ Turn the programme selector to " ○ ",

and, where required:

❑ Select a programme option ("", "" or "").

❑ Press the "" button.

❑ At the end of the programme option, turn the programme selector to " ○ ".

Unloading the laundry

❑ Turn off the water tap.

❑ Open the loading door.

If the loading door cannot be opened:
Wait for 2 minutes (the safety function is active)
or
there is still water in the washing machine if the "" option was selected. In this latter case, select the "" or "" programme.

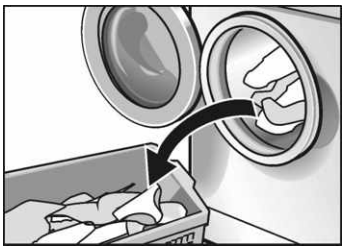

❑ Unload the laundry.

Caution
Remove any debris (e.g. coins, paper clips) from the drum and rubber seal – **risk of rust formation!**

❑ Leave the loading door open to allow the inside of the washing machine to dry out.

Special Applications

Pre-soak

- ❑ Load laundry of the same colour.
- ❑ Add the presoak agent to chamber **II** according to the manufacturer's specifications.
- ❑ Turn the programme selector to "30 °C Cottons + Linens".
  The " " control light comes on.
- ❑ Press the " " button. The " " control light comes on, and the programme starts.
- ❑ After approx. 15 minutes, turn the programme selector to " ". The laundry is left to lie in the water.
- ❑ Select a programme after the desired soaking period.

i Do not add any additional detergent. The presoak solution will be used in the wash programme.

Starching

The laundry must not be treated with fabric softener.

- ❑ Load the laundry.
- ❑ Dispense the correct amount of starch for approx. 15 litres / 3.3 gal. of water. Powdered starch must first be dissolved in water according to the manufacturer's specifications.
- ❑ Turn the programme selector to " ".
- ❑ Set the spin speed (" " is also possible).
- ❑ Press the " " button.

As soon as water starts to enter the machine:

- ❑ Pull out the detergent dispenser slightly.
- ❑ Add the starching solution to chamber **I**.
- ❑ Close the detergent dispenser.

If the " " option is selected, the " " programme must subsequently be selected.

Dyeing

Only use dyes that are environmentally compatible and suitable for use in washing machines.

Caution
Discoloration of the laundry in subsequent wash cycles cannot be completely ruled out.

- ❑ Always use dyes in accordance with the manufacturer's instructions.

After dyeing:

- ❑ Add ½ a measuring beaker of detergent to chamber **II**.
- ❑ Without any laundry in the drum, allow the "90 °C Cottons + Linens" programme to run through.
- ❑ Wipe the seal clean.

Decolorizing

Caution
Decolorants may contain sulphur or chlorine. These substances can cause parts of the washing machine to corrode. Do not decolorize items of laundry in the washing machine.

Cleaning and Care

⚠ **Risk of electric shock!**
Always disconnect the appliance from the mains before cleaning.

Never clean the washing machine with a jet of water.

⚠ **Risk of explosion!**
Never use solvents to clean the appliance.

Cleaning the appliance housing and control panel

As required:

- ❑ Use hot soapy water or a mild, non-abrasive cleaning agent.
- ❑ Rub dry with a soft towel.

Cleaning the drum

In the event that rust spots have formed due to left-over debris (e.g. coins, paper clips, needles, nails):

- ❑ Use a chorine-free cleaning agent. Follow the manufacturer's instructions. Never use steel wool.

Cleaning the detergent dispenser

In the event that residual detergents or additives have accumulated:

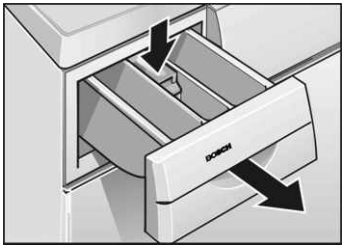

- ❑ Pull out the detergent dispenser up to the end stop, press down the hollow on the insert and remove the detergent dispenser completely.

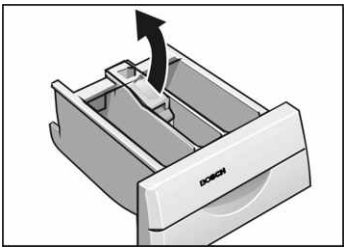

- ❑ Pull up the insert.
- ❑ Rinse the detergent dispenser under hot running water.

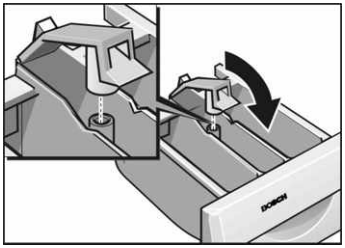

- ❑ Push down the insert until it clicks into place.
- ❑ Insert the detergent dispenser.

Cleaning the drain pump

This is necessary if the washing solution cannot be completely drained. The pump is blocked by either loose debris or fluff which accumulates if fluff-giving fabrics are washed.

Draining the washing solution

(Up to 20 litres / 4.4 gal. Have a suitable container ready.)

⚠ Risk of scalding!
Allow the hot washing solution to cool.
Keep children and domestic pets away from the washing machine.

- ❑ Turn the programme selector to " ○ ".
- ❑ Fold down the cover panel.

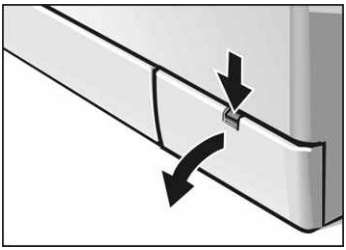

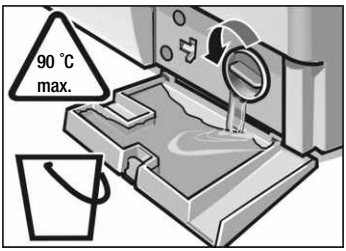

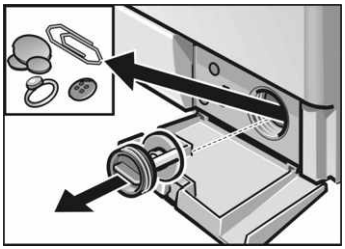

- ❑ Unscrew the pump cap slightly until the washing solution slowly begins to run into the cover plate cavity.
- ❑ When the cover plate cavity is half full, tighten the pump cap and empty the cover plate cavity.
- ❑ Repeat the last two steps until all the washing solution has been drained.
- ❑ Completely remove the pump cap.
- ❑ Remove any loose debris / fluff from inside the pump and clean the pump. The pump impeller must be able to rotate.
  Clean any residue or fluff from the thread of the pump cap and pump housing.
- ❑ Attach and tighten the pump cap.
- ❑ Attach and close the cover plate.

To avoid unused detergent from flowing into the drain during the next wash cycle:

- ❑ Pour 1 litre / 1 ¾ pt of water into chamber **II**.
- ❑ Select the "Spülen" programme.

Cleaning water inlet strainers

This is necessary if very little or no water flows into the washing machine.

First release the water pressure in the supply hose:

- ❑ Turn off the water tap.
- ❑ Turn the programme selector to any programme (except "⟲" and "🚿").
- ❑ Press the "⏻" button, and allow the programme to run for approx. 40 seconds.
- ❑ Turn the programme selector to " ○ ".

Cleaning the strainer at the water tap

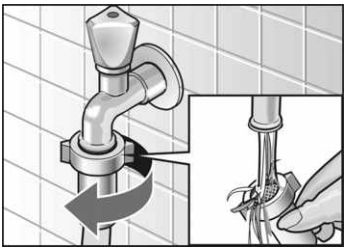

- ❑ Disconnect the hose from the water tap.
- ❑ Rinse the strainer under flowing water.
- ❑ Reconnect the hose.

Cleaning the strainer on the washing machine

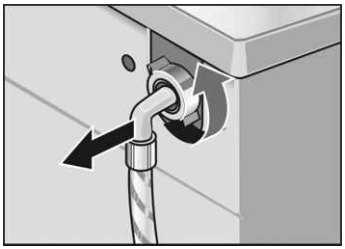

- ❑ Disconnect the hose from the back of the washing machine.

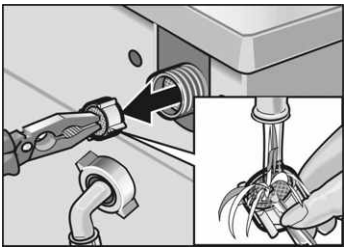

- ❑ Pull out the strainer and rinse under running water.
- ❑ Insert the strainer and reconnect the hose.
- ❑ Turn on the water tap and check whether water is still discharged. If water is still discharged, check that the strainer is attached properly.
- ❑ Turn off the water tap.

Descaling the washing machine

Caution
Descaling agents contain acids which can attack parts of the washing machine and discolour the laundry.

Provided that you use the correct amount of detergent, it is not necessary to descale the washing machine.

If, however, descaling the appliance becomes necessary, please follow the instructions provided by the descaling agent manufacturer.

Troubleshooting Minor Faults

⚠ Risk of electric shock!
Repairs must only be carried out by our Customer Service or an authorized technician.

If repairs are needed, and assuming that you cannot eliminate the fault yourself with the aid the following table:

- ❑ Turn the programme selector to " ○ ".
- ❑ Disconnect the washing machine from the mains.
- ❑ Turn off the water tap.
- ❑ Call Customer Service (refer to Page 34).

Fault	Cause	Action
The loading door cannot be opened.	"" was selected.	Select "" or "".
	Safety function is active.	Wait for 2 minutes.
Detergent residue in the detergent dispenser.	Detergent was damp or lumpy.	Clean and dry the detergent dispenser (refer to Page 27).
		Use the dispensing aid for liquid detergents.
Control lights do not come on.	A fuse has triggered.	Switch on / replace the fuse.
		Call Customer Service if this fault is repeated.
	Power failure.	An interrupted programme will be resumed when power returns. If you wish to unload the laundry, proceed as in "Cleaning the drain pump", Page 28.
	Plug is loose or not inserted.	Insert the plug.

Fault	Cause	Action
Programme does not start. The " ⏻ " control light flashes.	Loading door not closed.	Check whether laundry is trapped in door.
		Close the loading door (a click should be heard).
Programme does not start.	"⏻" button not pressed.	Press the "⏻" button.
Water does enter the machine or detergent is not washed away. The " | " control light flashes.	Water tap not turned on.	Turn on water tap.
	Supply hoses kinked or trapped.	Eliminate the cause.
	Strainer in supply hose clogged.	Clean the strainer (refer to Page 29).
Detergent in chamber **I** is not washed away.	A programme without Prewash was selected.	Select "⍦ 60 °C Cottons + Linens with Prewash".
Water cannot be seen in drum.	This is not a fault. The water lies below the visible part of the drum.	
Washing solution is not completely drained. The " ◯ " control light flashes.	Loose debris is blocking the pump.	Clean the pump (refer to Page 28).
	Fluff-producing laundry was washed. The water drainage pipe or drain hose is blocked.	Clean the water drainage pipe and/or drain hose.
Water is flowing out from underneath the machine.	The thread of the supply hose is not tight.	Tighten the thread.
	Leak in the drain hose.	Replace the drain hose.
Foam coming out of the detergent dispenser.	To much detergent.	Mix 1 tablespoon of fabric softener with ½ litre / 1 pt of water and pour into chamber **I** of the detergent dispenser.
		Reduce the amount of detergent next time.
The laundry was not spun	Large items of clothing became entangled and could not be distributed evenly in the drum. For safety reasons, the high-speed final spin cycle was automatically cancelled.	Always load large **and** small items together into the drum (see also unbalanced load detection system).

Fault	Cause	Action
Repeated spinning at short intervals.	This is not a fault. The imbalance compensation system is attempting to balance the load through repeated spins.	
Spin result unsatisfactory.	"" button pressed – maximum spin speed 800 r.p.m.	
	"" or "" programme selected – maximum spin speed 800 r.p.m.	
The programme takes longer than usual.	This is not a fault. Unbalanced load detection system attempts to distribute the washing evenly by spinning it several times.	Always load large **and** small items together into the drum.
	The foam detection feature has activated an additional rinsing cycle to reduce the amount of foam.	Add a more appropriate amount of detergent next time.
Unsatisfactory washing result.	The degree of dirt was higher than supposed.	Select a more suitable programme.
	Not enough detergent.	Add detergent according to the manufacturer's specifications.
Detergent residue on the laundry.	Some phosphate-free detergents contain water-insoluble residues that may appear as light spots on the laundry.	Select "" immediately, or brush off spots when laundry is dry.
Grey residues on the laundry.	Dirt accumulation from ointments, fats or oils.	Add the maximum amount of detergent and select the highest permissible temperature next time.

Customer Service

Before calling the Customer Service, please make sure that you cannot eliminate the fault yourself (refer to Page 31).

This is because consultation provided by our technicians, even within the warranty period, will lead to costs being incurred by yourself.

Your nearest Customer Service centre can be found in the index supplied. When calling the Customer Service, please specify the product number (E-Nr.) and production number (FD-Nr.) of your appliance.

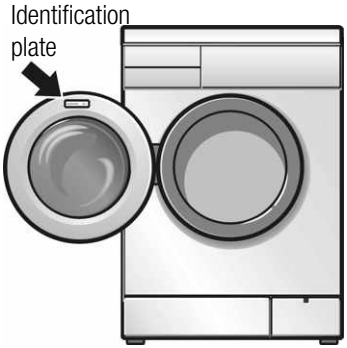

These numbers are shown on the rating plate which can be found on the frame of the open door and also on the identification plate, enclosed by a thick line, on the front of the machine behind the nameplate.

E-Nr. _____ **FD**_____

Product number **Production number**

Please note the two numbers in the space provided above.

In specifying the product number and production number of your appliance, you help us in our attempt to prevent unnecessary travelling and the associated extra costs.

Consumption Rates

Normal programme (without additional functions)	Load	Consumption rates **		
		Electricity	Water	Duration
40 °C Cottons + Linens	5.0 kg *	0.55 kWh	54 l	118 min.
60 °C Cottons + Linens	5.0 kg	0.95 kWh	54 l	118 min.
90 °C Cottons + Linens (the hot washing solution is mixed with approx. 7 litres of cold water before being drained)	5.0 kg	1.9 kWh	61 l	121 min.
40 °C Easy-care	3.0 kg *	0.5 kWh	50 l	78 min.
30 °C Delicates	2.0 kg	0.3 kWh	50 l	50 min.
30 °C Woollens	2.0 kg *	0.2 kWh	35 l	50 min.

* Calculated from test programmes pursuant to EN 60 456: 1999 and IEC 60456 Ed.3 1998: 02

** The consumption rates may deviate from the stated values depending on water pressure and hardness, room temperature, type and amount of laundry, detergents used, fluctuations in the mains voltage and selected additional functions.

Installation, Connection and Transport

Safety information

⚠ Risk of injury!

The washing machine is heavy. Take care when lifting it.

Caution
Frozen hoses can tear / burst. Do not install the washing machine outdoors or in an area prone to frost.

Take care not to damage the washing machine. Do not hold onto protruding parts (e.g. loading door) when lifting.

In addition to the safety information listed here, the local water and electricity supplier may have special requirements.

If in any doubt, have the appliance connected by an authorized technician.

Supplied accessories

In the drum:

– Water supply hose.

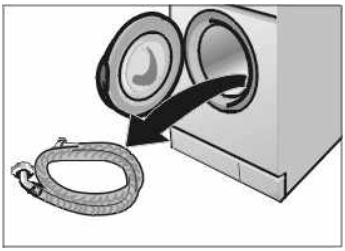

Moisture in the drum is due to the final inspection which every washing machine undergoes before it leaves the factory.

On the rear of the appliance:

– Water drainage hose.

– Elbow for attachment of the drainage hose, e.g. to the sink.

– Mains cable with plug.

Depending on the connection situation:

– 1 hose clip ∅ 24–40 mm (DIY store) is also required for connection to a siphon.

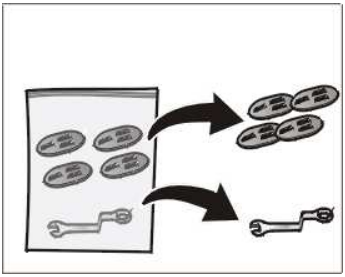

The bag contains:

– Covers for placing over the openings after the transport bolts have been removed.

– Wrench.

Useful tools

The following tools are helpful:

– Ring wrench (SW 13),

– Spirit level,

– Screwdriver .

Dimensions

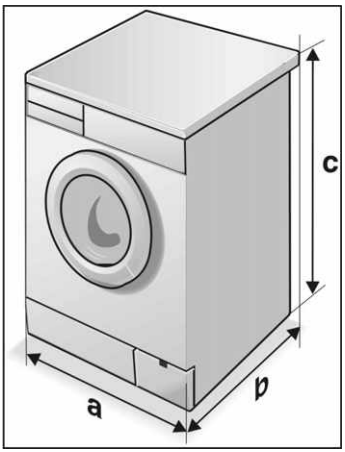

a = 600 mm

b = 590 mm

c = 860 mm

Approx. weight = 73 kg

Installation area

Appliance stability is important so that the washing machine does not “wander” during the spin cycles.

The installation area must be solid and even. Soft floor surfaces, such as carpets or surfaces with foam backing, are not suitable.

If the washing machine is to be installed on a wood joist ceiling:

- ❑ If possible, place the washing machine in a corner of the room.
- ❑ Screw a water-resistant wooden board (at least 30 mm thick) to the floor.
- ❑ Affix the feet of the washing machine using holding brackets *.

If the washing machine is to be placed on a pedestal:

- ❑ Affix the feet of the washing machine using holding brackets *.

* Holding brackets (set) can be obtained from a specialist store or the Customer Service (order no. WMZ 2200).

Built-under or built-in appliance installation

The appliance must be built under or built in prior to connecting the power supply.

The appliance can be built into or under a kitchen work surface. For this purpose, a recess width of 60 cm is required.

- ❑ The washing machine must only be installed under a one-piece worktop that is permanently attached to the surrounding cabinets.

Caution
For safety reasons in built-under installation, a metal cover* must be assembled by a specialist in place of the appliance cover plate.

* The metal cover (kit) can be obtained from a specialist store or the Customer Service (order no. WMZ 2390).

Removing the transport bolts

Caution
The transport bolts must always be removed before using the appliance for the first time and must be retained for any subsequent transport (e.g. when moving).

Before removing the transport bolts:

- ❑ Take the hose out of the holder.
- ❑ Detach the elbow.
- ❑ Release all four transport bolts using the SW 13 wrench until they can be moved freely.
- ❑ Completely remove transport bolts by reaching through the open washing machine door and pulling the drum forwards slightly.

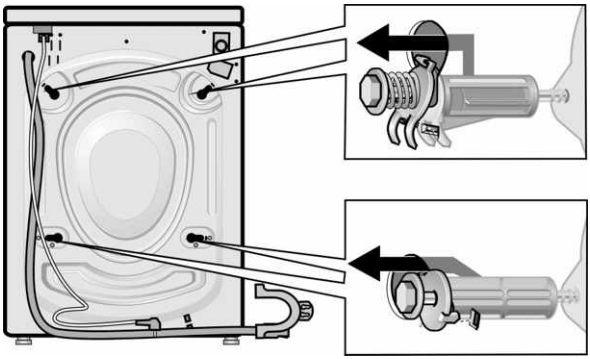

- ❑ Insert the covers.

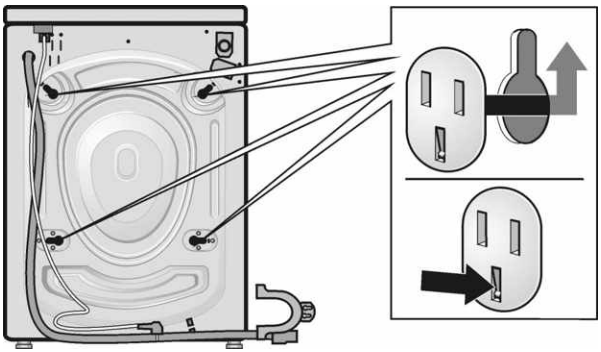

Storing the transport bolts

Always keep the transport bolts for subsequent transportation of the appliance (e.g. when moving house).

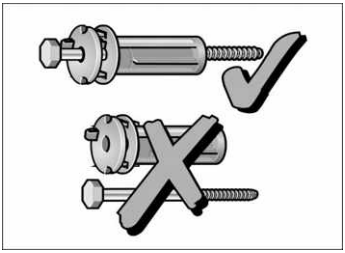

❑ Store the transport bolts with washer and bush (and spring) attached.

Hose and cable lengths

Left-hand connection

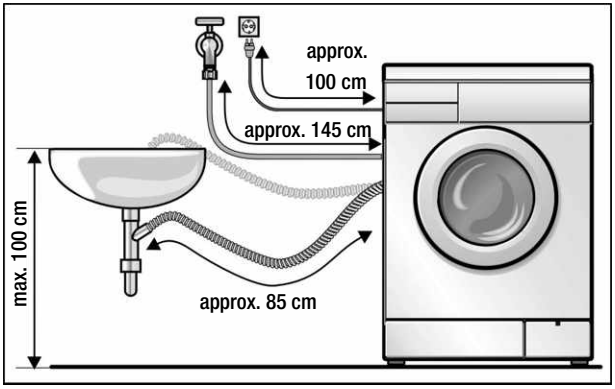

Right-hand connection

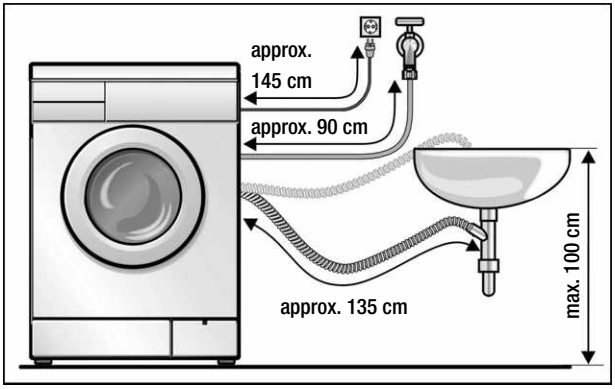

Other hoses

Available from specialist dealers:

- Connecting kit with plastic hose (approx. 2.5 m), (order no. WMZ 2380).
- Extended supply hose (approx. 2.2 m).

Water connection

Water supply

Caution
The washing machine must only be operated with cold tap water. Do not connect the appliance to the mixer tap of an unpressurized hot-water boiler.

If in any doubt, have the water connection carried out by an authorized technician.

The water supply hose must not be:

– Bent or squashed.

– Modified or cut through (stability can no longer be guaranteed).

Plastic threads must only be tightened by hand. Do not remove the strainer from the water supply hose.

Observe the water pressure in the supply network:

– The water pressure should be between 1 and 10 bars (when the tap is turned on, at least 8 litres of water is discharged per minute).

– A pressure reducing valve must be installed if the maximum water pressure is exceeded.

Connect the water supply hose:

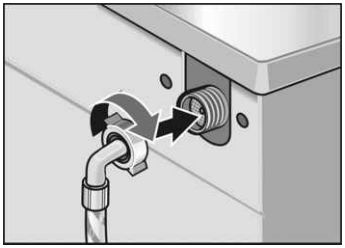

❑ To the back of the washing machine, and...

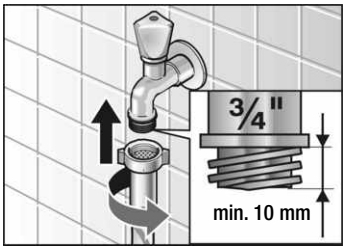

❑ To the water tap.

❑ After connection:
Turn on the water tap completely and check that the connection points are water-tight.

Water drainage

Caution
Do not bend or pull the water drainage hose.

Height difference between the placement area and drainage point: maximum 100 cm.

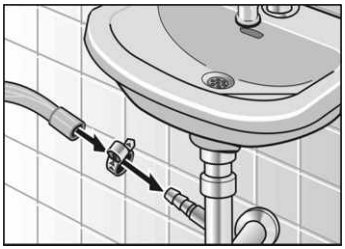

Drainage into a siphon:

❑ Secure the connection point with a hose band clip of 24-40 mm dia. (from specialist store).

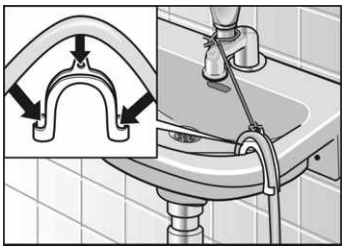

Drainage into a wash basin:

Caution
The plug must not block the drain of the wash basin.

❑ Secure the water drainage hose so that it does not slide out.

❑ When water is being drained, check that the water flow is fast enough.

Levelling procedure

All four appliance feet must be firmly on the ground. The washing machine must not wobble.

Level the washing machine with the assistance of the four adjustable feet and a spirit level:

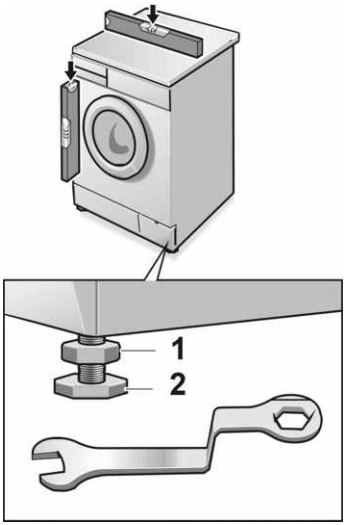

❑ Loosen the counter-nut **1** using the wrench.

❑ Adjust the height by means of turning the appliance foot **2**.

❑ Tighten lock nut **1** against the housing.

Electrical connection

Caution
The washing machine must only be connected to alternating current and using a properly installed socket outlet with earthing contact.

The mains voltage must correspond to the voltage specification on the washing machine (nameplate). Connection specifications as well as the required fuses are stipulated on the appliance nameplate.

Make sure that:

- the mains plug fits the socket outlet.
- the cable cross-section is permissible.
- the earthing system is properly installed.

The mains cable may be replaced by an electrician only.
Replacement mains cable available from Customer service.

Do not use multiple plugs / connectors or extension cables.

In the event that an earth-leakage circuit breaker is to be used, only use types marked with the following symbol: .
Only this symbol can guarantee compliance with all current regulations.

Do not insert / remove the mains plug with wet or damp hands.

Handle the plug body only when removing the plug from the socket.

Transport, e.g. when moving

Before transporting the washing machine:

- Turn off the water tap.
- Drain any residual washing solution (refer to Page 28).
- Release the water pressure in the supply hose (refer to Page 29).
- Disconnect the washing machine from the mains.
- Dismantle the supply and drainage hoses.
- Reinstall the transport bolts.

Having transported the appliance and ensured proper installation and connection, allow the "" programme to run through before starting the first wash programme.

Preparing and inserting the transport bolts

❑ Remove the covers.

❑ Preparing the transport bolts:
Pull the bolt out of the sleeve until the end of the bolt is flush with the end of the sleeve.

❑ Insert and tighten the transport bolts.
The lug on the washer must be located in the groove in the rear panel of the housing.

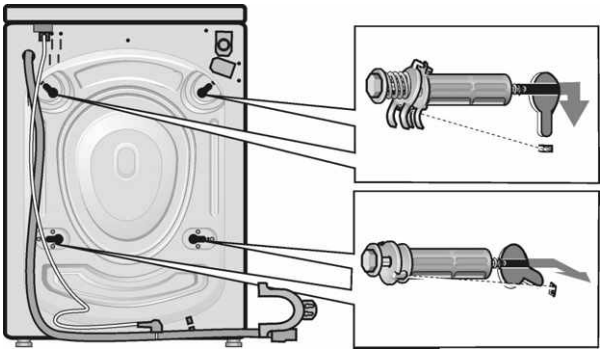

ROBERT BOSCH HAUSGERÄTE GMBH

0302 en
5050 002 130